Clamp arms

for swing clamp cylinders, standard variants and blanks

Clamp arm fixtures:

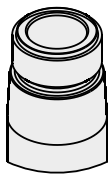

Taper
(SPK)

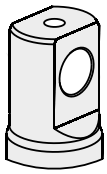

Pendulum
(SPP)

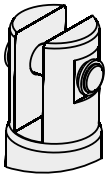

Clevis
(SPG)

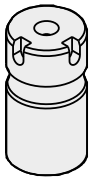

Cylindrical holder
(SPZ)

Webcode: 024000

Which clamp arm for which swing clamp cylinder?

Note the information about the clamp arm holder and the effective clamping force depending from operating pressure on the data sheet of the selected swing clamp cylinder.

Single clamp arms:

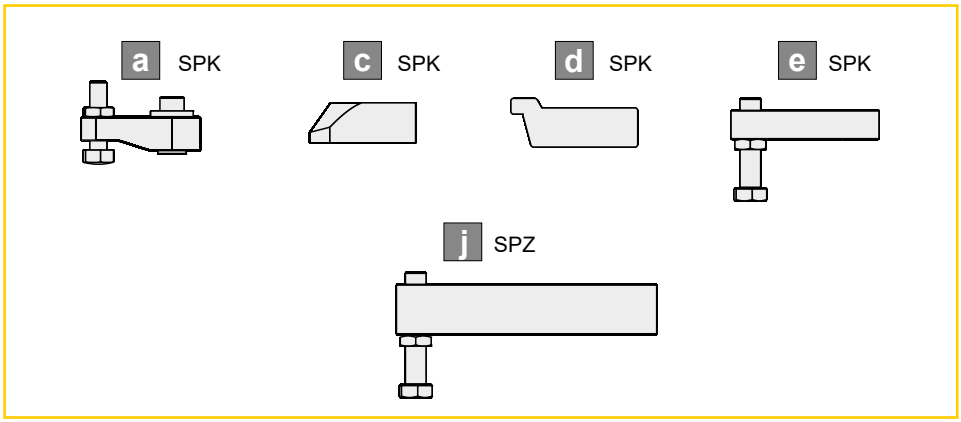

Double clamp arms:

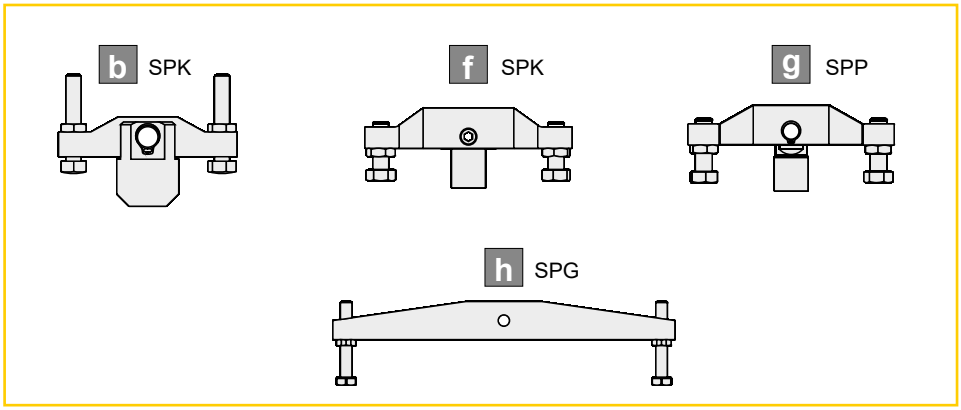

Housing design cylinder:	Data sheet:	Webcode:	Suitable clamp arms:								
			a	b	c	d	e	f	g	h	j
A	240-1	024001	x	x	-	-	-	-	-	-	-
B	240-2	024002	x	x	-	-	-	-	-	-	-
D	240-3	024003	x	x	-	-	-	-	-	-	-
A	240-10	024010	-	-	x	x	x	x	-	-	-
A	240-20	024020	-	-	-	-	-	-	x	x	-
B and C	240-30	024030	-	-	x	x	x	x	-	-	-
F	240-40	024040	-	-	x	x	x	x	-	-	-
D	240-50	024050	-	-	x	x	x	x	-	-	-
E	240-60	024060	-	-	x	x	x	x	-	-	-
A	240-70	024070	-	-	-	-	-	-	-	-	x

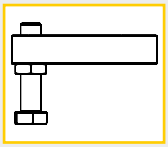

Additional information:

in our catalog or at www.hydrokomp.de

- Swing clamp cylinders
- Selection guide
- Safety instructions

Application of special clamp arms:

Special clamp arms are available on request.

To dimension special clamp arms it is important to keep with the clamping force, indicated on the data sheet of the selected swing clamp cylinder. The assigned operating pressures may not be excessed. Once the length of standard clamp arms is to be exceeded, operating pressure and volume flow have to be reduced according to the data in the diagram on the data sheet.

We also design and manufacture customized variants!

HYDROKOMP®
Hydraulische Komponenten GmbH

+49 6401 225999-0
sales@hydrokomp.de
Siemenstr. 16
35325 Mücke (Germany)
www.hydrokomp.de

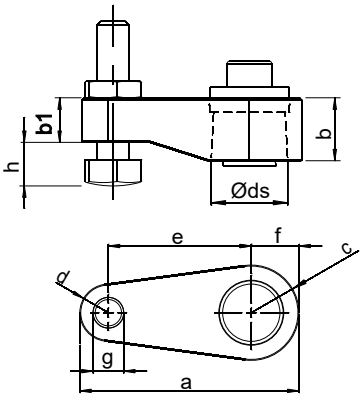

a Single clamp arm for taper, pmax. 350 bar

for piston Ø	[mm]	**14**	
rod Øds	[mm]	10	
a	[mm]	42	
b	[mm]	12	
b1	[mm]	8	
c	[mm]	10	
d	[mm]	6	
e	[mm]	26	
f	[mm]	10	
g		M6	
hmin.	[mm]	3,5	
hmax.	[mm]	40	
Weight	[kg]	0,05	
Order no.:		**SPK-A10-026-002**	

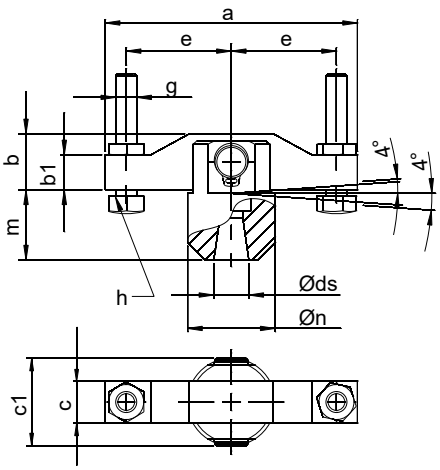

b Double clamp arm for taper, pmax. 350 bar

for piston Ø	[mm]	**14**	
rod Øds	[mm]	**10**	
a	[mm]	72	
b	[mm]	16	
b1	[mm]	10	
c	[mm]	12	
c1	[mm]	25	
e	[mm]	30	
g		M6	
hmin.	[mm]	3,5	
hmax.	[mm]	40	
m	[mm]	20	
Øn	[mm]	25	
Weight	[kg]	0,18	
Order no.:		**SPK-B10-030-002**	

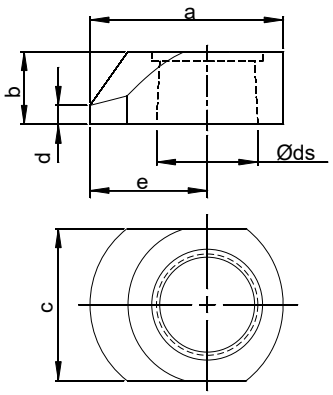

c Single clamp arm for taper, pmax. 500 bar

for piston Ø	[mm]	**25**	**40**	**50**	**63**
rod Øds	[mm]	**20**	**32**	**40**	**50**
a	[mm]	41	61	76	90
b	[mm]	16	23	28	34
c	[mm]	32	48	60	78
d	[mm]	6	6	11	14
e	[mm]	25	37	45	52
Weight	[kg]	0,08	0,23	0,5	0,88
Order no.: SPK...→		**-C20-025-001**	**-C32-037-001**	**-C40-045-001**	**-C50-052-001**

The order number starts with SPK to be completed. Example: SPK-C20-025-001

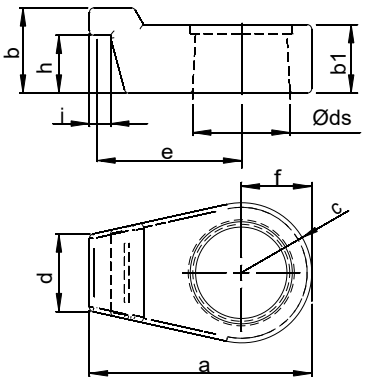

d Single clamp arm for taper, pmax. 300 bar

for piston Ø	[mm]	**25**	**40**	**50**	**63**
rod Øds	[mm]	**20**	**32**	**40**	**50**
a	[mm]	51,5	76	100	123
b	[mm]	21	28	34	40
b1	[mm]	15,5	22,5	28	34
c	[mm]	16	23	33	37,5
d	[mm]	14	25	39	39
e	[mm]	33,5	50	64	82,5
f	[mm]	16	23	33	37,5
h	[mm]	14,5	19	23	27
i	[mm]	7	7	7	8
Weight	[kg]	0,11	0,3	0,84	1,3
Order no.: SPK...→		**-D20-033-001**	**-D32-050-001**	**-D40-064-001**	**-D50-082-001**

The order number starts with SPK to be completed. Example: SPK-D20-033-001

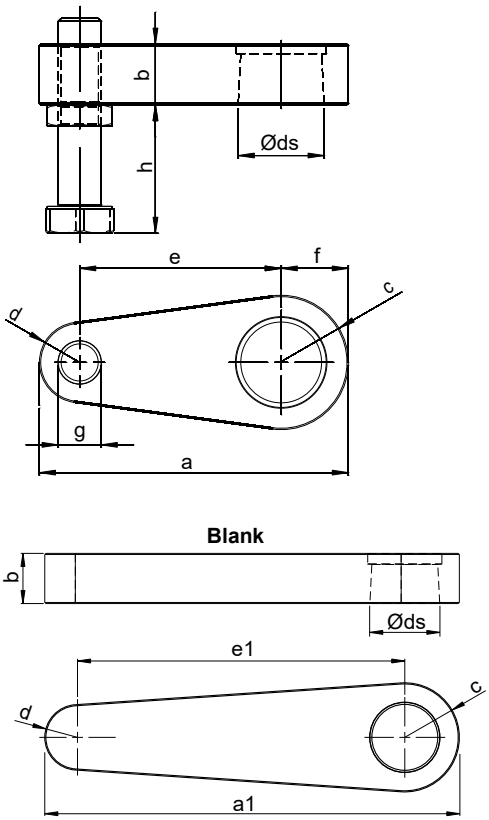

e Single clamp arm for taper, pmax. 200 bar

for piston Ø	[mm]	25	40	50	63
rod Øds	[mm]	20	32	40	50
a	[mm]	75	115	140	178
a1	[mm]	125	190	235	298
b	[mm]	16	23	28	34
c	[mm]	16	25	30	39
d	[mm]	9	15	15	19
e	[mm]	50	75	95	120
e1	[mm]	100	150	190	240
f	[mm]	16	25	30	40
g		M10	M16	M16	M20
hmin.	[mm]	10	15	15	19
hmax.	[mm]	64	79	79	98
without thread					
Weight	[kg]	0,18	0,65	1,85	2,3
Order no.: SPK... →		**-E20-050-001**	**-E32-075-001**	**-E40-095-001**	**-E50-120-001**
with thread and contact bolt					
Weight	[kg]	0,2	0,7	1,03	2,55
Order no: SPK... →		**-E20-050-002**	**-E32-075-002**	**-E40-095-002**	**-E50-120-002**
Blank without contact bolt					
Weight	[kg]	0,34	1,19	2,01	4,01
Order no.: SPK... →		**-E20-100-003**	**-E32-150-003**	**-E40-190-003**	**-E50-240-003**

The order number starts with SPK to be completed. Example: SPK-E20-050-001

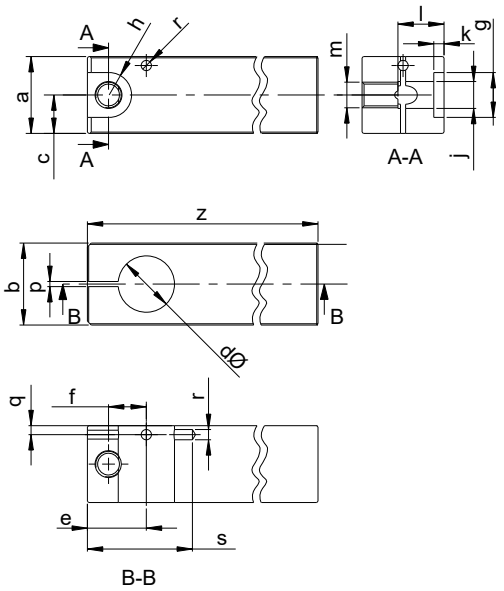

j Single clamp arm for cylindrical holder, pmax. 70 bar

for piston Ø	[mm]	37	44	51
rod Ød	[mm]	22	25	30
a	[mm]	30	34	40
b	[mm]	32	36	45
c	[mm]	15	17	20
e	[mm]	23	26,5	31,5
f	[mm]	14,75	17	20
g	[mm]	17,5	20	23
h	[mm]	R8,75	R10	R11,5
j	[mm]	10,5	12,5	14,5
k	[mm]	4	4	4
l	[mm]	18	20	25,5
m	[mm]	M10	M12	M14
p	[mm]	2	2	2
q	[mm]	3,5	4	5,5
r	[mm]	4	4	6
s	[mm]	41	46	56
z	[mm]	160	170	175
Order no.: SPZ- →		**J22-137-001**	**J25-143-001**	**J30-143-001**

The order number starts with SPK to be completed. Example: SPZ-J22-137-001

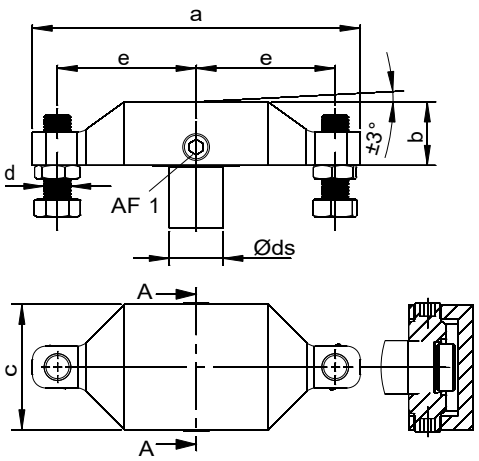

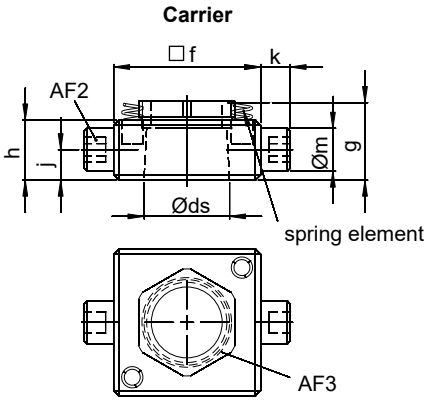

f Double clamp arm for taper, pmax. 500 bar

for piston Ø	[mm]	25	40	50	63
rod Øds	[mm]	20	32	40	50
a	[mm]	138	196	216	236
b	[mm]	28,5	38	47	56
c	[mm]	59	75	85	105
d		M10	M16	M16	M20
e	[mm]	60	83	92	100
f	[mm]	43	55	63	77
g	[mm]	21,5	29	35	41
h	[mm]	16	23	28	34
j	[mm]	7,5	11	15	17
k	[mm]	9	11	12	15
Øm	[mm]	10	16	18	20
AF1	[mm]	17	24	24	30
AF2	[mm]	5	8	8	8
AF3	[mm]	30	36	55	68
Double clamp arm with contact bolt					
Weight	[kg]	0,83	2,11	3,17	5,24
Order no.: SPK... →		**-F20-060-002**	**-F32-083-002**	**-F40-092-002**	**-F50-100-002**
Carrier with threaded bolt and spring element					
Weight	[kg]	0,32	0,45	0,53	0,68
Order no.:		**SPT-F20-001**	**SPT-F32-001**	**SPT-F40-001**	**SPT-F50-001**

The order number starts with SPK to be completed. Example: SPK-F20-060-002

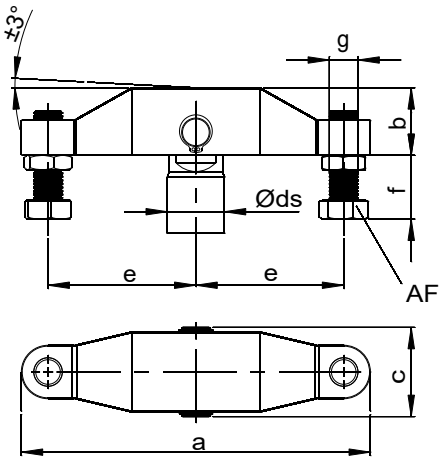

g Double clamp arm for pendulum, pmax. 500 bar

for piston Ø	[mm]	25	40
rod Øds	[mm]	20	32
a	[mm]	139	200
b	[mm]	30	42
c	[mm]	28	45
e	[mm]	60	83
fmin.	[mm]	10	15
fmax.	[mm]	64	79
g	[mm]	M10	M16
AF		17	24
Weight	[kg]	0,83	2,11
Order no.:		**SPP-G20-060-002**	**SPP-G32-083-002**

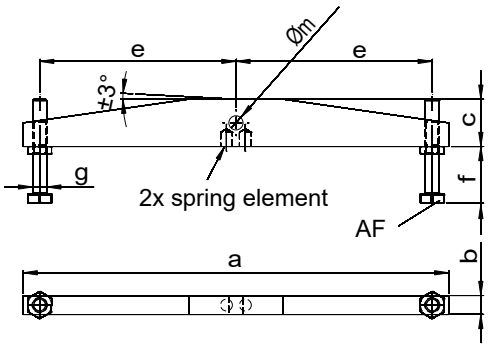

h Double clamp arm for clevis, pmax. 160 bar

for piston Ø	[mm]	25	40
rod Øds	[mm]	20	32
a	[mm]	180	200
b	[mm]	8	12
c	[mm]	20	30
e	[mm]	83	93
fmin.	[mm]	20	20
fmax.	[mm]	30	40
g		M5	M8
Øm	[mm]	6	10
AF	[mm]	8	13
Weight	[kg]	0,2	0,51
Order no.:		**SPG-H20-083-002**	**SPG-H32-093-002**

Fixing elements for clamp arms:

The swing clamp cylinders with taper are supplied with screws or nuts for fixing the clamp arms.

Design:	Data sheet:	Webcode:	Fixing elements according to the piston Ø [mm]:					Other:
			Hexagon socket head screw	Hexagon nut		Slotted nut		
			M5	M18x1,5	M28x1,5	M35x1,5	M45x1,5	
A	240-1	024001	14	-	-	-	-	-
B	240-2	024002	14	-	-	-	-	-
D	240-3	024003	14	-	-	-	-	-
A	240-10	024010	-	25	40	50	63	-
A	240-20	024020	-	-	-	-	-	clevis / pendulum
B and C	240-30	024030	-	25	40	50	63	-
F	240-40	024040	-	25	40	-	63	-
D	240-50	024050	-	25	40	-	63	-
E	240-60	024060	-	25	40	50	63	-
A	240-70	024070	-	-	-	-	-	cylindrical holder

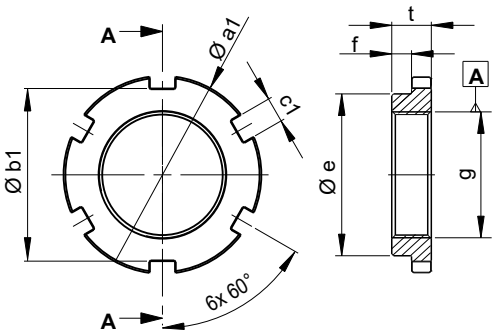

Slotted nut:

for piston Ø	[mm]	50	63
a1 Ø	[mm]	5,5	6,5
b1 Ø	[mm]	48	60
c1	[mm]	7	8
e Ø	[mm]	45-0,2	55,5-0,2
f	[mm]	5,5	6,5
g		M35x1,5	M45x1,5
t	[mm]	11	12

Instruction for assembly/disassembly a clamp arm:

During the mounting of the clamp arm, make sure that torques are transferred in the piston rod. Hold against the clamp arm when you tighten or loosen the tightening screw (see figure).

1. For swing clamps with overload protection, the function must first be tested. To do this, turn the piston until you feel the overload protection engage. The swing clamp has three ratchet points spaced at 120° intervals.

2. Normally the mounting of the clamp arm is done in the depressurised state, as described in.

3. However if the clamp arm must be positioned in a precise clamping position, the swing clamp must be applied with pressure at connection A and the piston retracted. Finally position the clamp arm in the intended clamping position on the clamp arm holder. After positioning the clamp arm on the holder, tighten the fastening screws by hand. Then, tighten the fixing screws with a suitable tool.

4. Carry out the clamping process several times to check if the clamping point and the clamping stroke agree as intended.

5. After several clamping cycles the torque must be check again at the fastening screws. This prevents the clamp arm from loosening.

Risk of injury:

If the swing clamp is pressurized, there is a high risk in the swing area for injuries due to crushing the hands and other body parts.

Avoid reaching into the swing area.